CONTINENTAL® PROGRESSING CAVITY ULTRAPUMP
A DIVISION OF KINETIFLO GROUP

CPML67 Model Exploded View

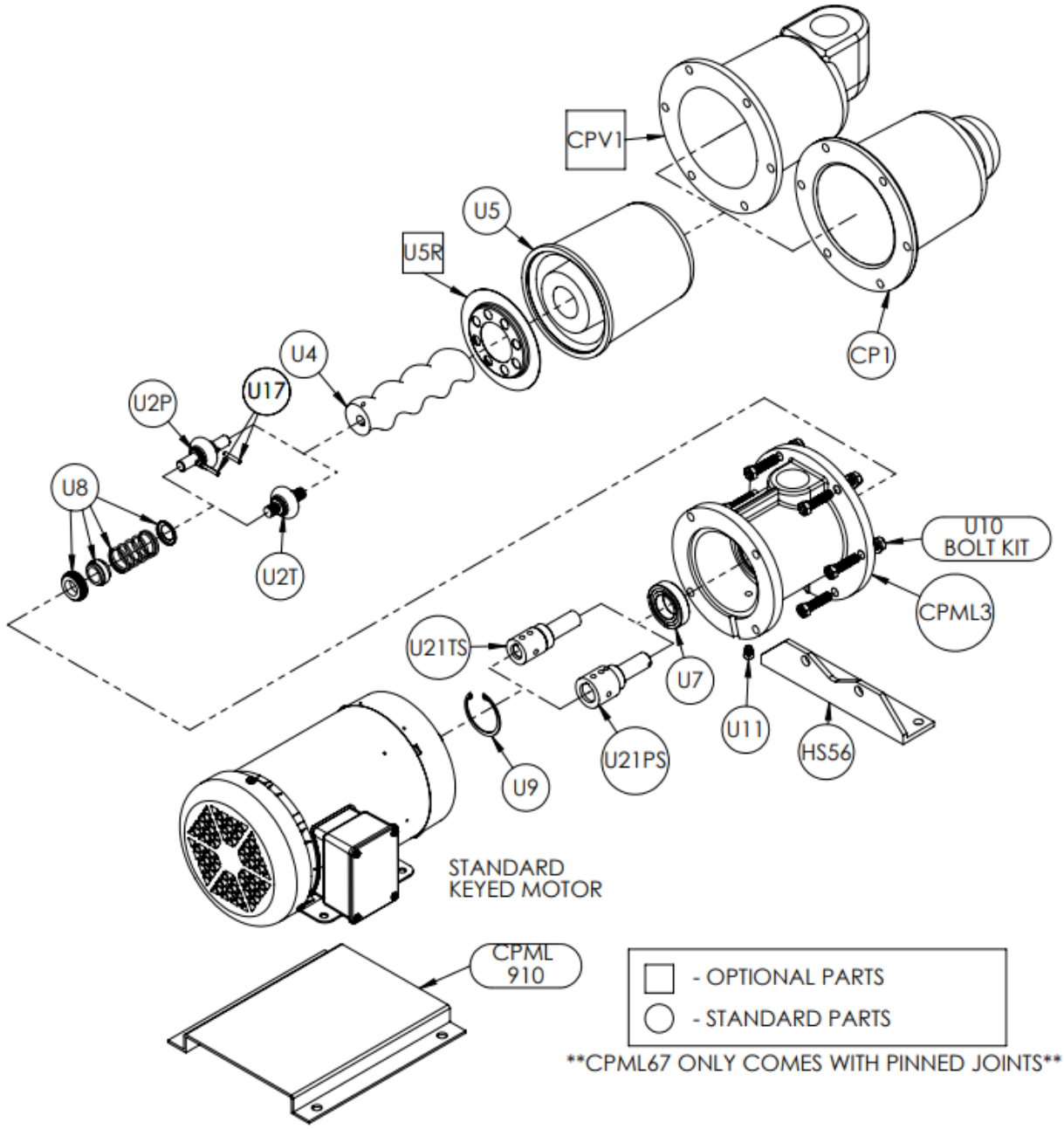

Pump bolts to any Nema Frame 56 C-Face motor with feet.

29425 State Hwy B
Warrenton, MO 63383
Ph. 636.456.6006